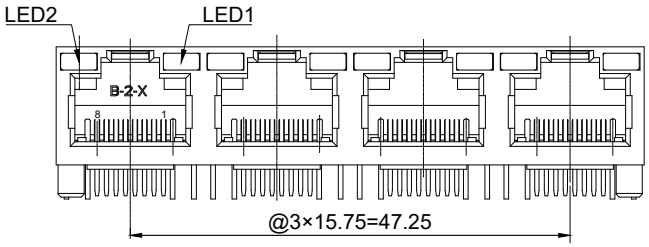

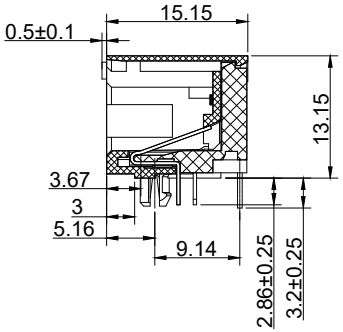

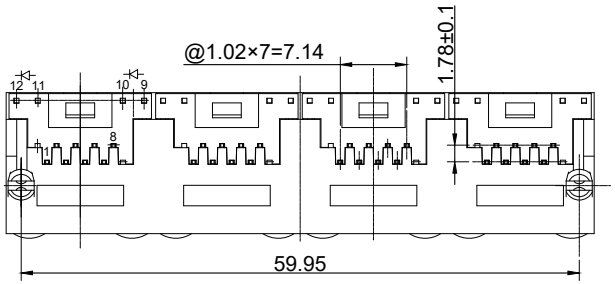

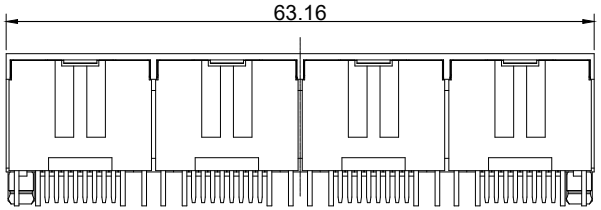

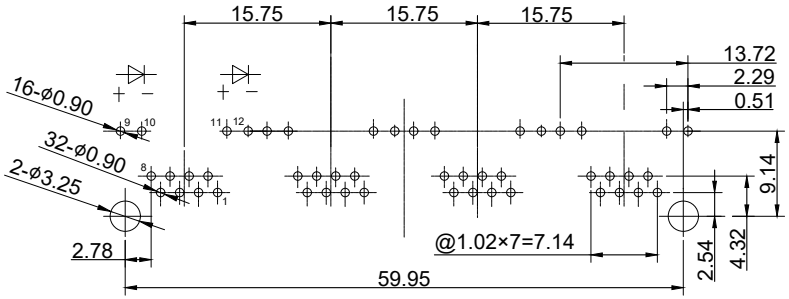

RECOMMENDED PCB LAYOUT

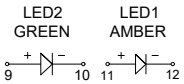

NOTES:

MECHANICAL

HOUSING&INSERT	: PBT UL94V-0
CONTACT	: PHOSPHOR BRONZE
CONTACT PLATING	: CONTACT AREA SELECTIVE GOLD PLATING SOLDER AREA TIN PLATING OVER NICKEL
MATING/UNMATING FORCE	: 30N Max.
RETENTION STRENGTH	: 50N FOR 60s±5s.
DURABILITY	: 750 CYCLES MIN.

ELECTRICAL

VOLTAGE RATING	: 125V AC RMS.
CURRENT RATING	: 1.5 AMPS @25°C
CONTACT RESISTANCE	: 20mΩ Max.
INSULATION RESISTANCE	: 1000MΩ Min. @500V DC
WITHSTAND VOLTAGE	: 1000V AC RMS CONTACT TO CONTACT @0.5mA 50Hz OR 60Hz ONE MINUTE

ENVIRONMENTAL

STORAGE TEMPERATURE	: -40°C~+85°C
OPERATION TEMPERATURE	: -40°C~+85°C

E.S. GLOBAL TOP

UNIT	mm
REVISION	09
PRODUCT	RJ45 1X4 SIDE ENTRY JACK WITH LED
DWG NO.	EZC1145-48N21-04
PART NO.	
PROJECTION	
SCALE	
SHEET	1 OF 1
TOLERANCES	00~15 ± 0.15 15~30 ± 0.20 30~ ± 0.25 ANGLES ± 1°