Note:
Housing & insert: PA46 Black UL 94V-0
Contact: phosphor bronze Au 15u" plated on contact area
Shield: brass Ni plated

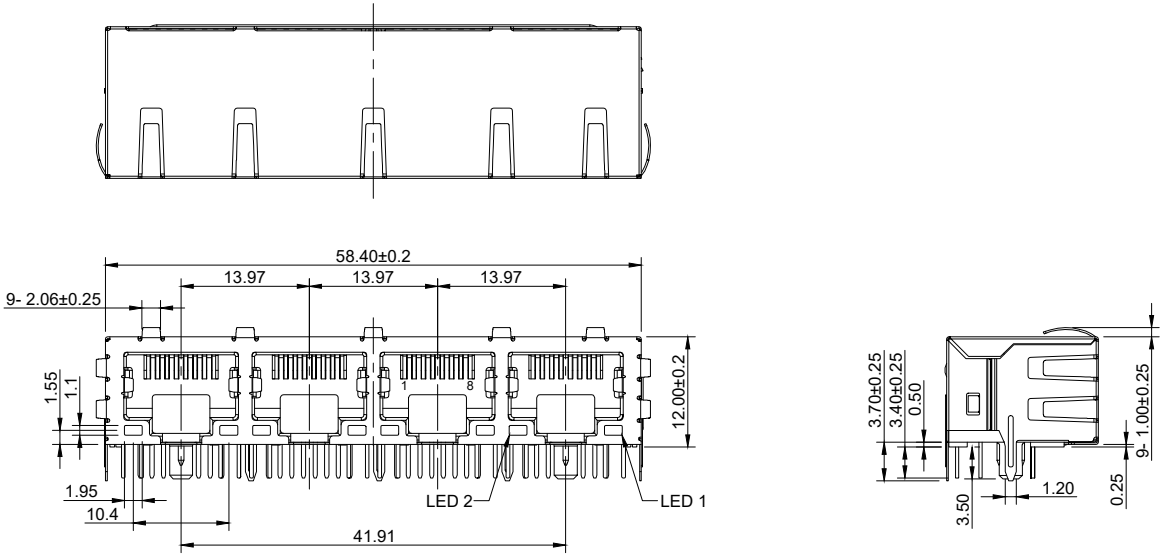

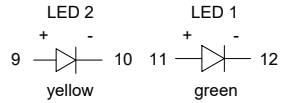

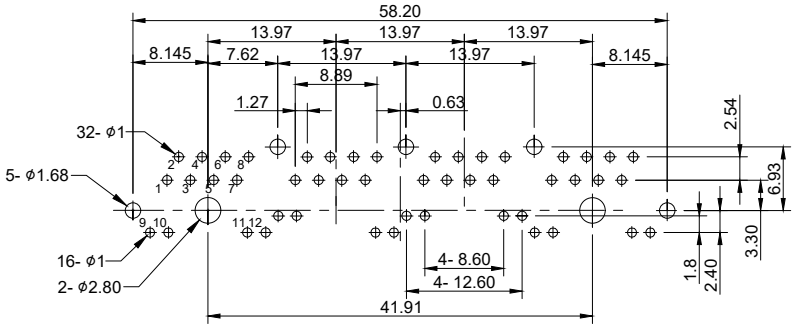

RECOMMENDED PCB LAYOUT

E.S. GLOBAL TOP		UNIT: mm
		REVISION: 03
PRODUCT: RJ45 1x4 Shielded with LED		TOLERANCES: 00~15 ±0.15, 15~30 ±0.20, 30~ ±0.25, angles ±1°
DWG NO.: EZC1145-48S21-03	PART NO.:	
PROJECTION	SCALE	SHEET: 1 OF 1