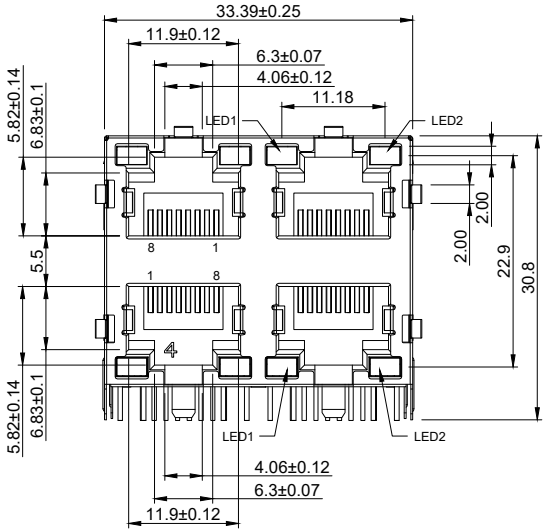

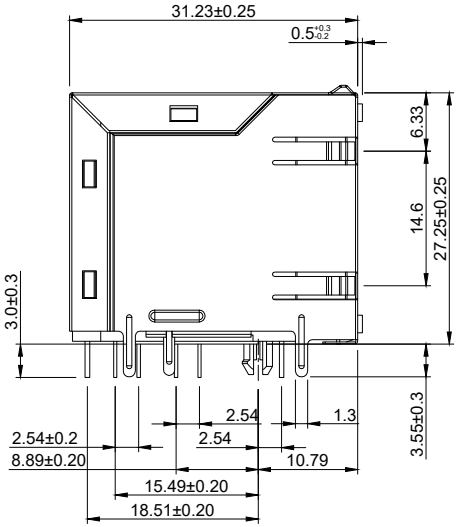

Housing: PA66 UL 94V-0 black
Insert: PA66 UL 94V-0 black
Contact: phosphor bronze, mating area 6u" Au plating
Shield: brass Ni plating
Durability: 750 cycles min.
Mating/unmating force: 30N max.
Retention strength: 50N for 60 sec. ±5
Operation temperature: -40°C~+85°C
Storage temperature: -40°C~+85°C
Voltage/current rating: 150V AC RMS / 1.5A
Contact resistance: 20mΩ max.
Insulation resistance: 1000MΩ min. @ 500V DC
Dielectric strength:
1000V AC or 1500V DC RMS @ 0.5mA 50Hz/60Hz one minute

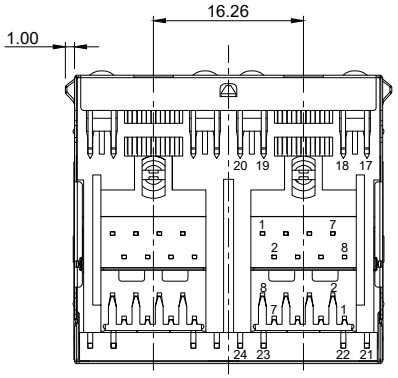

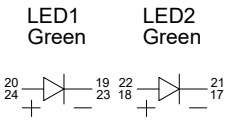

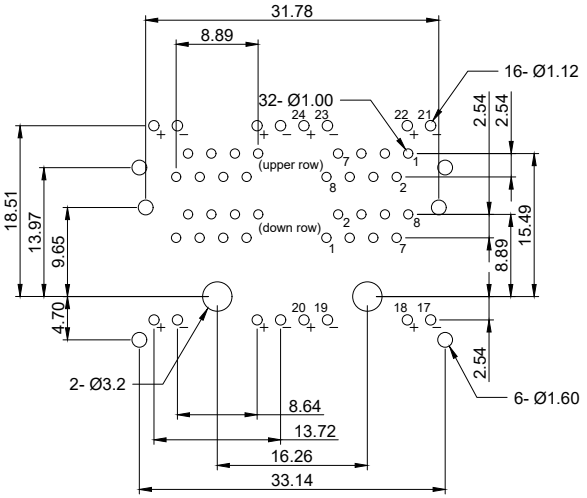

Recommended PCB Layout

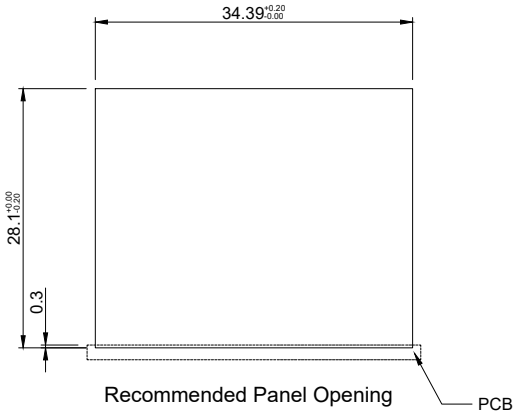

Recommended Panel Opening

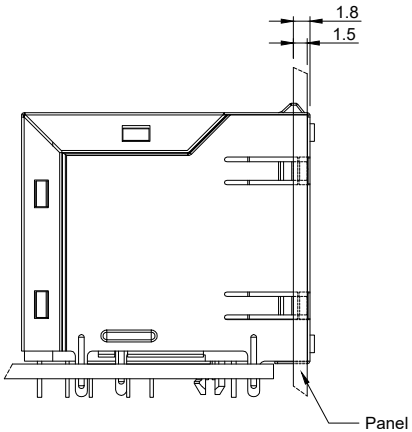

E.S. GLOBAL TOP		UNIT: mm
		REVISION: 37
PRODUCT: RJ45 2x2 SIDE ENTRY JACK WITH LED		TOLERANCES: 0~15 ±0.15; 15~30 ±0.20; 30~ ±0.25; Angles ±1°
DWG NO.: EZC1445-228S21-01	PART NO.:	
PROJECTION	SCALE	SHEET: 1 OF 1