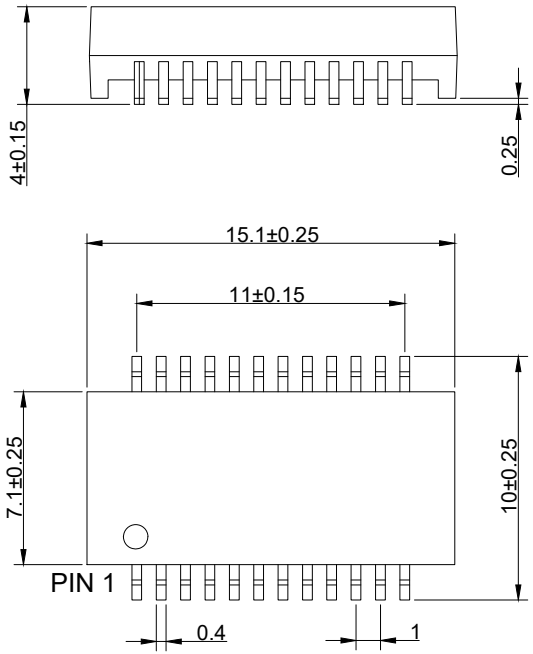

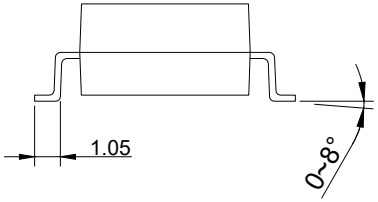

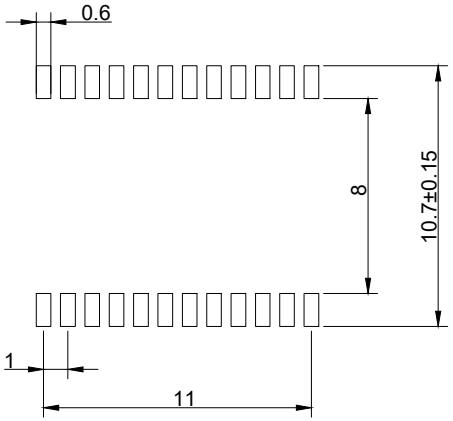

RECOMMENDED PCB LAYOUT

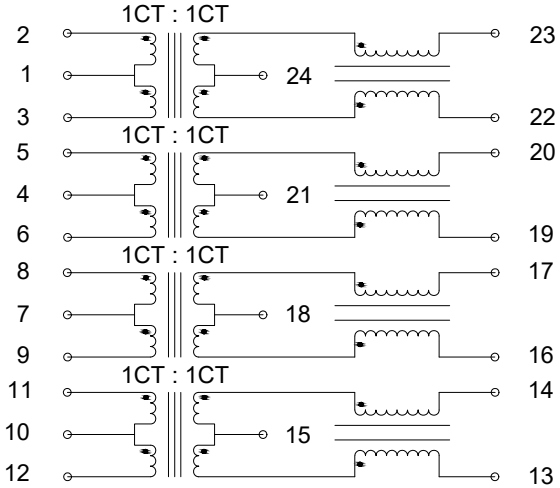

CIRCUIT SCHEMATIC

PARAMETER	SPECIFICATIONS	
TURNS RATIO	(2~3) : (23~22)	1:1 ±3%
	(5~6) : (20~19)	
	(8~9) : (17~16)	
	(11~12) : (14~13)	
INDUCTANCE	(2~3), (5~6), (8~9), (11~12), (23~22), (20~19), (17~16), (14~13)	365uH MIN. @ 0.1V 100KHz 8mA DC BIAS
LEAKAGE INDUCTANCE	2~3 BY 23&22 SHORT	0.35uH MAX @1MHz
	5~6 BY 20&19 SHORT	
	8~9 BY 17&16 SHORT	
	11~12 BY 14&13 SHORT	
INTERWINDING CAPACITANCE	(2~3) : (23~22)	27pF MAX @1MHz
	(5~6) : (20~19)	
	(8~9) : (17~16)	
	(11~12) : (14~13)	
DC RESISTANCE	(23~22) : (20~19) : (17~16) : (14~13)	1.1Ω MAX.
RETURN LOSS	1-30MHz	-16dB Min.
	30-60MHz	-14dB Min.
	60-80MHz	-12dB Min.
DIELECTRIC WITHSTAND	(2~3) : (23~22)	1500V AC
	(5~6) : (20~19)	
	(8~9) : (17~16)	
	(11~12) : (14~13)	
INSERTION LOSS	100KMz-100MHz	-1.0dB Max.
CROSS TALK	1-100MHz	-30dB Min.
COMMON TO COMMON MODE ATTENUATION	30-100MHz	-30dB Min.
OPERATING TEMPERATURE	0 ~ 70°C	
STORAGE TEMPERATURE	-40°C ~ 85°C	

E.S. GLOBAL TOP

UNIT: mm

REVISION: X

PRODUCT: LAN FILTER

TOLERANCES: ± 0.25 UNLESS OTHERWISE SPECIFIED

DWG NO.: EZCB2402-02

PART NO.:

PROJECTION

SCALE

SHEET: 1 OF 1