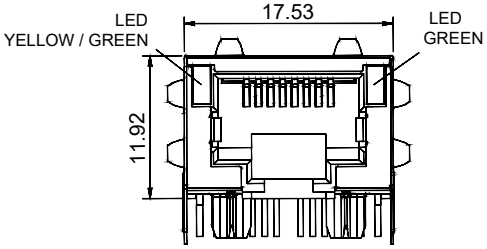

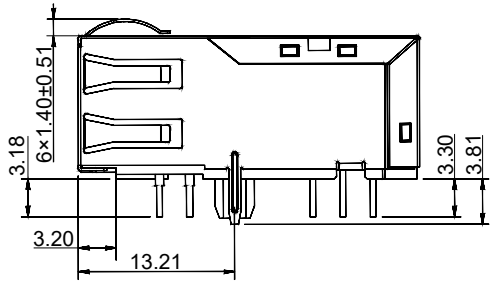

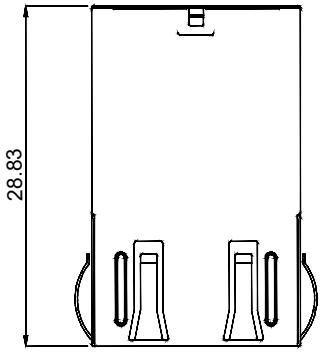

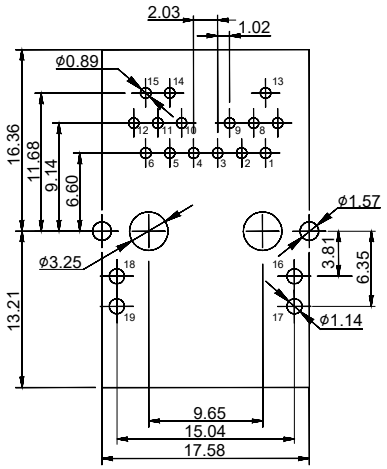

RECOMMENDED PCB LAYOUT

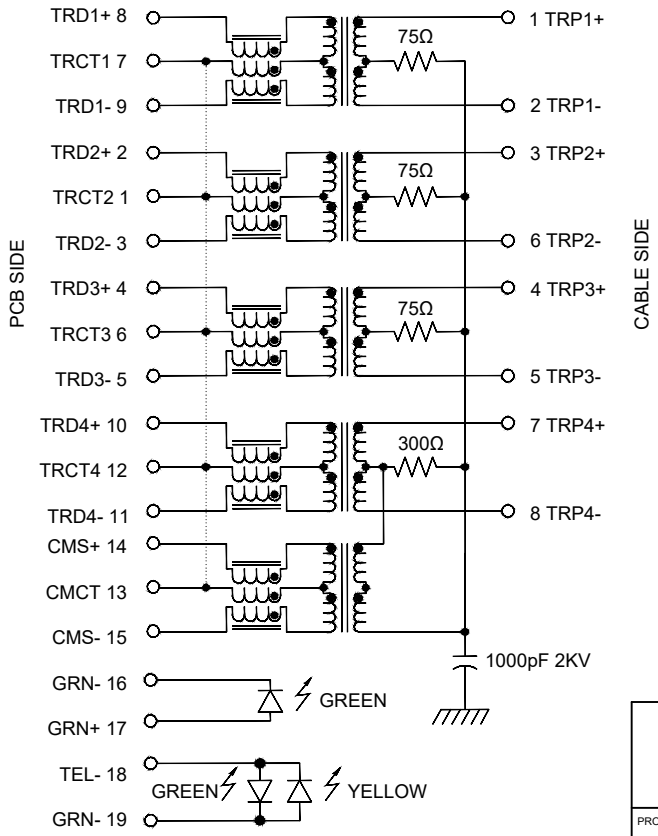

CIRCUIT SCHEMATIC

NOTES:

HOUSING	: NYLON46 GLASS FILLED UL94V-0 BLACK
SHIELD	: C2680H NICKEL PLATING 20u" MIN.
RJ TERMINAL	: NYLON46 UL94V-0 BLACK C5210EH NICKEL PLATING 40U"~60U" FOR ALL TIN 100% AND GOLD PLATING
INPUT TERMINAL	: NYLON46 GLASS FILLED UL94V-0 BLACK SUS430 NICKEL PLATING 40U"~60U" FOR ALL AND TIN 100%
OPERATION TEMPERATURE	: 0 ~ +70°C

PARAMETER	SPECIFICATIONS	
TURNS RATIO	1.00±2%	
POLARITY	PER SCHEMATIC	
PRIMARY INDUCTANCE	120uH Min. @100KHz, 100mV	
INSERTION LOSS	1-65MHz	-0.8dB Max.
	65-125MHz	-1.0dB Max.
	125-400MHz	-2.5dB Max.
	400-500MHz	-3.5dB Max.
RETURN LOSS	1-40MHz	-18dB Min.
	40-400MHz	$-18+10*LOG_{10}$ (f/40) dB Min.
	300-500MHz	$-8+30*LOG_{10}$ (f/400) dB Min.
CROSS TALK ADJACENT CHANNELS (SDD21-ADJ.)	1-100MHz	-30dB Min.
	100-500MHz	-20dB Min.
COMMON MODE REJECTION RATIO (SCC21)	1-100MHz	-30dB Min.
	100-300MHz	-22dB Min.
	300-500MHz	-17dB Min.
COMM. TO DIFF REJECTION RATIO (SDC12)	1-100MHz	-32dB Min.
	100-300MHz	-27dB Min.
	300-500MHz	-22dB Min.
ISOLATION	2250V DC FOR 60s	

E.S. GLOBAL TOP

UNIT	mm
REVISION	P1
PRODUCT	RJ45 1X1 ICM 10G BASE-T
DWG NO.	EZI11S-115ND21-01
PART NO.	
PROJECTION	
SCALE	
SHEET	1 OF 1

TOLERANCES
.0 ± 0.38
.00 ± 0.20
.000 ± 0.10
0.° ± 2.0°
.0° ± 1.0°