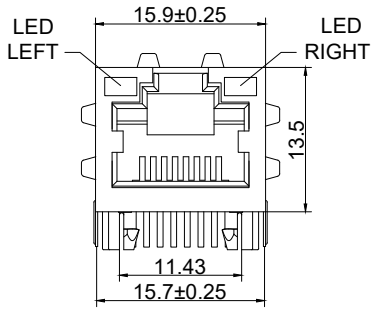

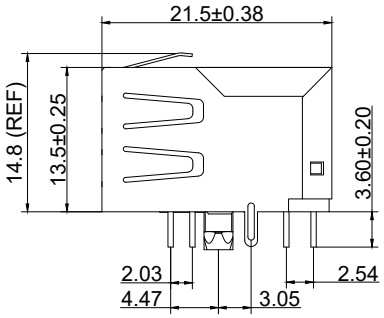

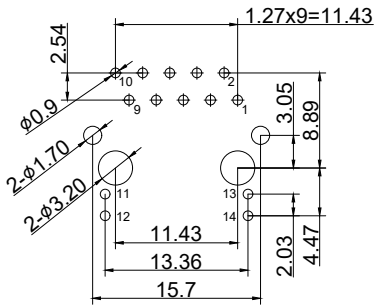

RECOMMENDED PCB LAYOUT

NOTES:

HOUSING	: NYLON66 GLASS FILLED UL94V-0 BLACK
SHIELD	: C2680H NICKEL PLATING 20u" MIN.
RJ TERMINAL	: NYLON66 UL94V-0 BLACK C5210EH NICKEL PLATING 40U"~60U" FOR ALL TIN 100% AND GOLD PLATING
INPUT TERMINAL	: NYLON66 GLASS FILLED UL94V-0 BLACK SUS430 NICKEL PLATING 40U"~60U" FOR ALL AND TIN 100%

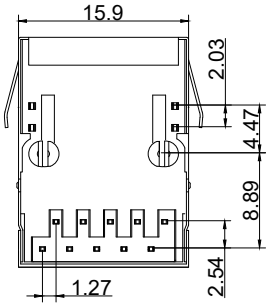

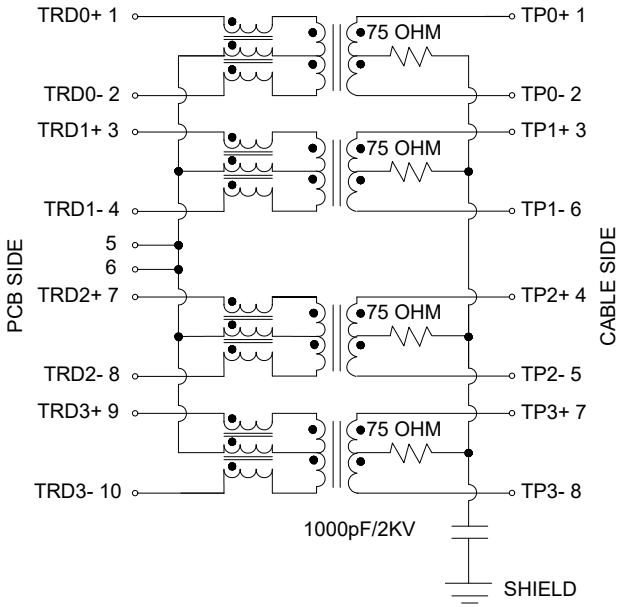

CIRCUIT SCHEMATIC

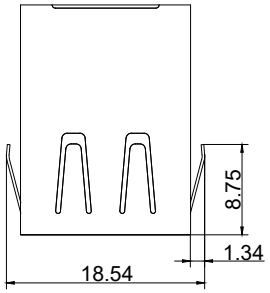

PARAMETER	SPECIFICATIONS	
OPERATING TEMPERATURE	0°C TO +70°C	
TURNS RATIO	1.00 ± 2%	
POLARITY	PER SCHEMATIC	
INSERTION LOSS (SDD21&SDD12)	1-50MHz	50-125MHz
	-0.5 dB MAX	-1.0 dB MAX
PHY-SIDE RETURN LOSS (SDD11-Zref=100 OHMS ± 1%)	1-40MHz	40-200MHz
	-20 dB MIN	-20+15*LOG10(f/40) dB MIN
LINE-SIDE RETURN LOSS (SDD22-Zref=100 OHMS ± 1%)	1-40MHz	40-200MHz
	-20 dB MIN	-20+15*LOG10(f/40) dB MIN
INDUCTANCE (OCL)	120 uH MIN @ 100KHz, 100mV	
CROSSTALK, ADJACENT CHANNELS(SDD21-ADJ.)	1-125MHz	
	-30 dB MIN	
COMMON MODE REJECTION RATIO(SCC21)	30-200MHz	
	-30 dB MIN	
COMM. TO DIFF REJECTION RATIO(SCC12)	10-125MHz	
	-45+f/35 dB MIN	
INPUT-OUTPUT ISOLATION	2250 VDC FOR 60 SECONDS	

LED LEFT
GREEN

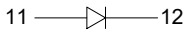

LED RIGHT
YELLOW

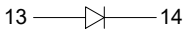

ESGT
E.S. GLOBAL TOP

UNIT	mm
REVISION	P1
PRODUCT	RJ45 1x1 ICM 2.5G BASE-T
DWG NO.	EZI25S-110NU21-01
PART NO.	
PROJECTION	
SCALE	
SHEET	1 OF 1
TOLERANCES	X±0.38 XX±0.20 XXX±0.10 X.°2.0 .X°1.0